ITEM NO.	PART NUMBER	DESCRIPTION	DESCRIPTION 2	QTY.
1	POLE	POLE, DIRECT BURIAL	-	1
2	TEN-0002	3" TENON	3.5" HEIGHT	1
3	COV-0012	HANDHOLE COVER, 2-1/2" X 5"	ROUND TAPERED	1
4	RN0250-0003	RIVET NUT, 1/4-20	.280 - .500 GRIP RANGE	2
5	PS0250	PHILLIPS SCREW 1/4"-20 X 1"	-	2

REVISIONS				
ECO	REV.	DESCRIPTION	DATE	INITIALS
6830	1.0	REPLACE COV-0001 WITH COV-0012, ADD RN0250-0003 AND PS0250-0009, UPDATE DRAWING FORMAT AND NOTES, UPDATE CABLE ENTRY HOLE TO 2-1/4" FROM 1-1/4"	5/22/2024	AKS
	1.1	REPLACE PS0250-0009 WITH PS0250	11/11/2024	STK

FEATURE ORIENTATIONS				
	0°	90°	180°	270°
CABLE ENTRY	X			
HAND HOLE	X			

NOTE: ALL HOLES DRILLED ONLY THROUGH THE FACES SPECIFIED BY 'X'

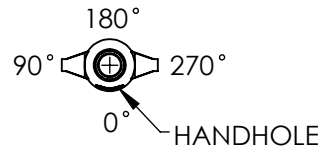

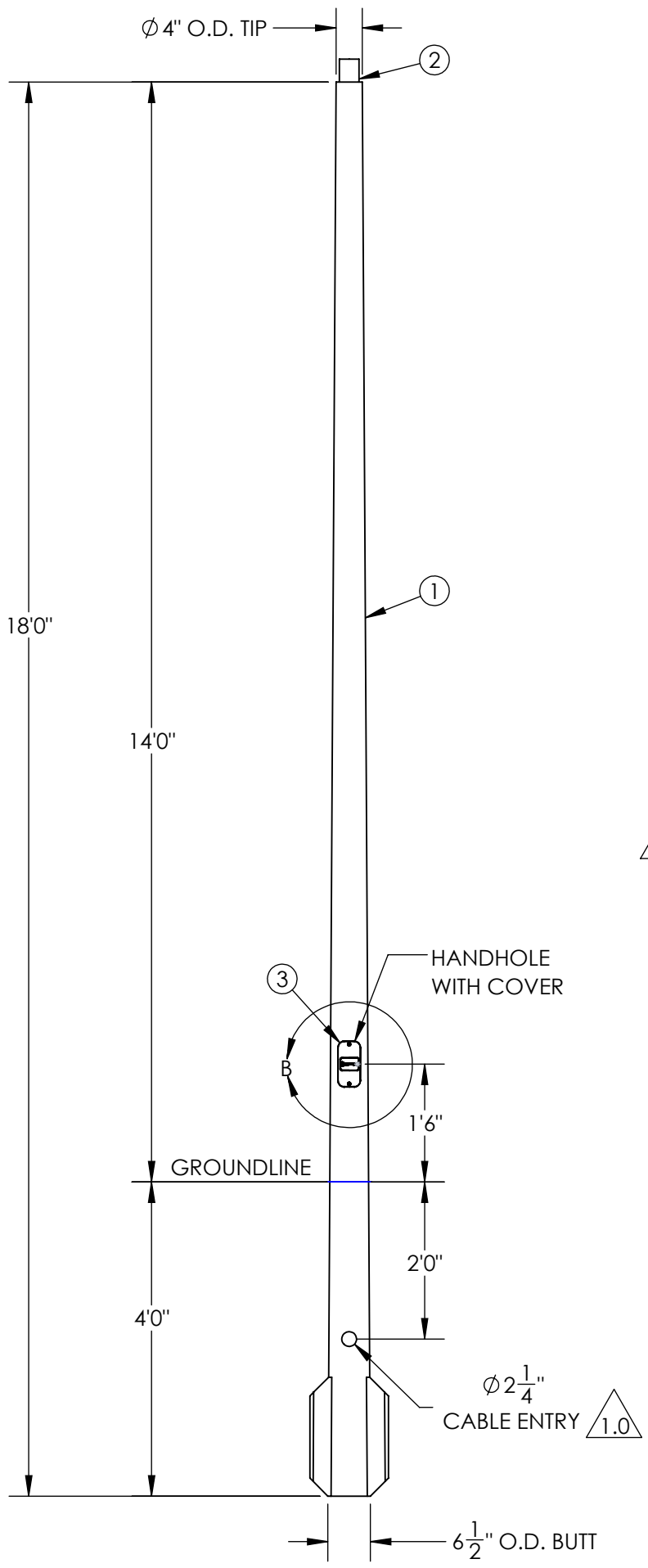

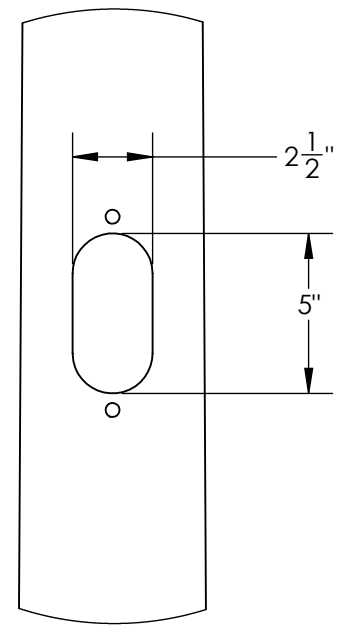

DETAIL B
HANDHOLE CUTOUT
COVER REMOVED FOR CLARITY
SCALE 1 : 6

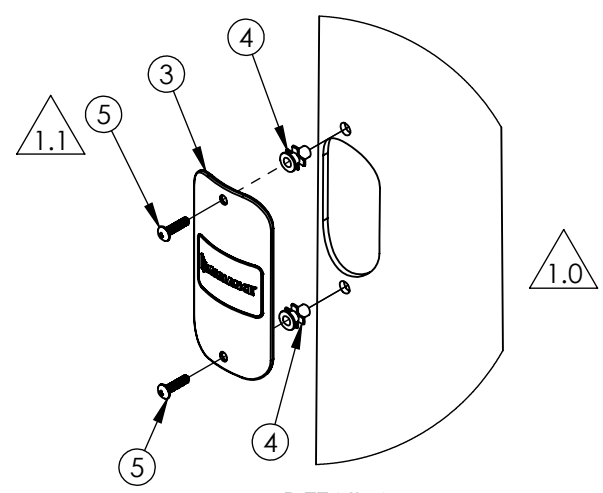

DETAIL A
COVER ASSEMBLY
SCALE 1:6

NOTES:

1. DIRECT BURIAL CLASS 1 POLE PER ASTM 4923. POLE TOP DEFLECTION SHALL NOT EXCEED 15% OF THE ABOVE GROUND HEIGHT AT MAXIMUM WIND LOADING AND MAXIMUM FIXTURE WEIGHT.
2. DESIGN CRITERIA PER AASHTO LTS-6-2013 WITH A MINIMUM SAFETY FACTOR OF 1.5 PER ANSI C136.20-2012.
3. WIND SPEEDS DEFINED AS 3 SECOND GUST PER ASCE 7-16 WITH VELOCITY CONVERSIONS PER 2018 IBC 1609.3.1.
4. EMBEDMENT BASED ON MINIMUM DEPTH RECOMMENDED BY ANSI C136.20-2012 SECTION 5.3 AND ASSUMING CLASS 2 SOIL OR BETTER WHEN LOADED AT MAXIMUM EPA.

MAXIMUM EPA PER WINDZONE										
MPH	**90**	**100**	**110**	**120**	**130**	**140**	**150**	**160**	**170**	**180**
EPA	**11.8**	**9.0**	**7.0**	**5.4**	**4.3**	**4.1**	**3.4**	**2.9**	**2.5**	**2.1**

---UNLESS OTHERWISE SPECIFIED---
DIMENSION UNITS ARE IN FEET AND INCHES
DIMENSIONS SHOWN ARE NOMINAL

STATE:	RELEASED	2024-11-21
DRAWN:	BMR	2022-04-27
CHECKED:	ARK	2024-11-20
APPROVED:	STK	2024-11-21

REPLACES: -

PROPRIETARY AND CONFIDENTIAL
THE INFORMATION CONTAINED IN THIS DRAWING IS THE SOLE PROPERTY OF GEOTEK. ANY REPRODUCTION IN PART OR AS A WHOLE WITHOUT THE WRITTEN PERMISSION OF GEOTEK IS PROHIBITED.

THIRD ANGLE PROJECTION

CUSTOMER SIGNATURE: DATE:

AMERICAN LIGHTING SYSTEMS™
15841 Old US Highway 441
Tavares, Florida 32778
(321) 203-4869
sales@americanlightingsystems.com
AmericanLightingSystems.com

DESCRIPTION:
POLE ASSEMBLY, DIRECT BURIAL
INTERMEDIATE DUTY, 18FT

1421 SECOND AVE NW
STEWARTVILLE, MN 55976
(800) 533-1680
www.geotek.com

SIZE: B
DWG. NO. **DB4TI18N3BK**
POLE COLOR: **BLACK**
REV: 1.1
SCALE: 1:24
SHEET 1 OF 1