| POLE SPECIFICATIONS | | | |
|---|---|---|---|
| NO. | COMPONENT | ASTM DESIGNATION | MIN. YIELD (P.S.I) |
| 1. | POLE SHAFT | A-500 GR. B | 46,000 |
| FINISH SPECIFICATIONS | | | |
| POLES SHALL HAVE A POLYESTER POWDER COAT FINISH IN A STANDARD COLOR. | | | |

| POLE DIMENSIONS | | | | |
|---|---|---|---|---|
| POLE HGT (FT.) | TOP SQ. SIZE (IN.) | BOT. SQ. SIZE (IN.) | GAGE | MTG. HGT. (FT.) |
| 35' | 6.00 | 6.00 | 7 GAGE | 30' |

| ALLOWABLE WIND LOADING (SQ. FT.) | | | | | |
|---|---|---|---|---|---|
| WIND* | INDICATED EPA | 80 MPH | 90 MPH | 100 MPH | 120 MPH |
| EPA | - | 17.9 | 14.5 | 11.7 | 8.3 |

*WITH 1.3 GUST FACTOR

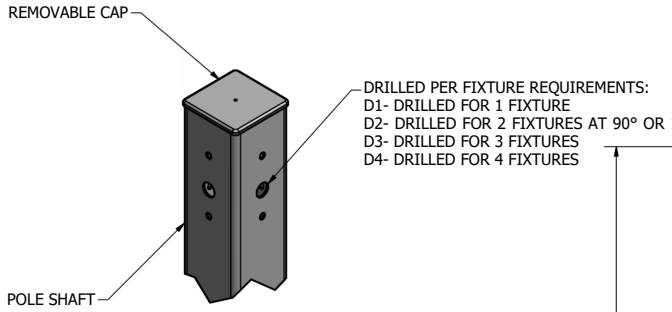


DRILL MOUNT OPTIONS

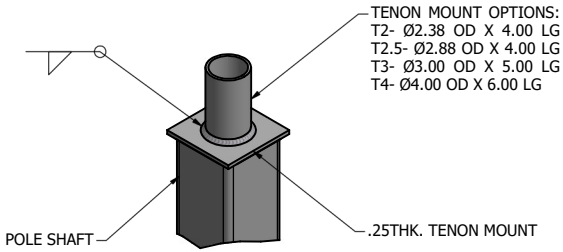


TENON MOUNT OPTIONS

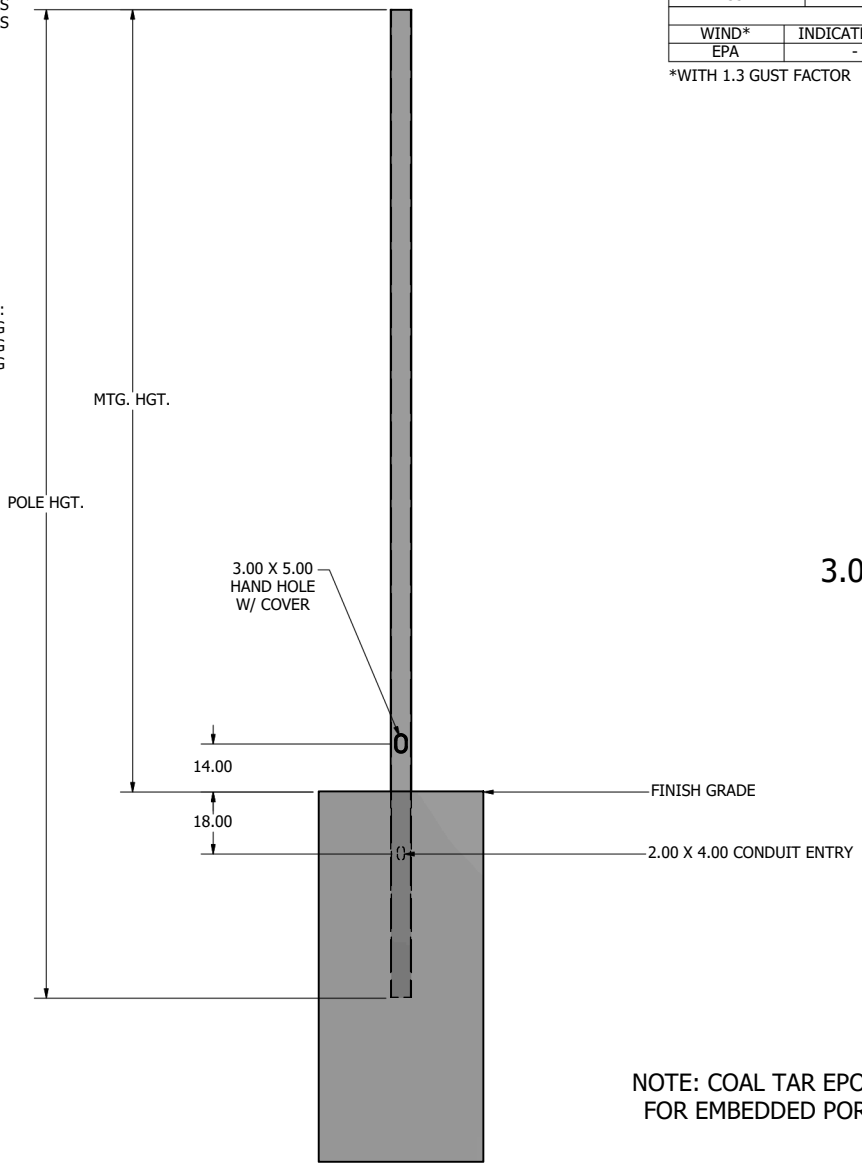


POLE DETAIL

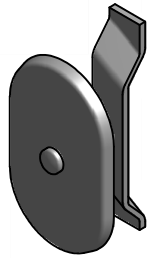

3.00 X 5.00 HAND HOLE COVER

NOTE: COAL TAR EPOXY COATING AVAILABLE AS AN OPTION FOR EMBEDDED PORTION PLUS 6 IN. OF THE POLE SHAFT.

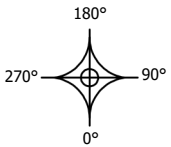


DRAWN: M. HARVALA 6/8/2015
C H ECKE D
REV ISI ON : D A TE:
AP PR OVE D:
QUOTE:
S.O.#
REF:
SCALE: NONE


AMERICAN LIGHTING SYSTEMS™
15841 Old US Highway
441 Tavares, FL 32778
(321) 203-4869
sales@americanlightingsystem.com
www.AmericanLightingSystem.com


SOME GEOGRAPHICAL AREAS HAVE SPECIAL WIND CONDITIONS THAT CAN CREATE WIND INDUCED VIBRATIONS CAUSING A FATIGUE PROBLEM. NO METHOD HAS YET BEEN FOUND FOR PREDICTING DESTRUCTIVE LIGHTING POLE VIBRATION. THESE CONDITIONS ARE UNIQUE AND CANNOT BE GUARANTEED AGAINST, AND ARE THE RESPONSIBILITY OF A LOCAL SITE ENGINEER.

TITLE:
C AT ALO G:
DWG NO: ALS-SSQS-30-6-7-DB
SIZE: C
SHEET 1 OF 1