POLE SPECIFICATIONS			
NO.	COMPONENT	ASTM DESIGNATION	MIN. YIELD (P.S.I)
1.	POLE SHAFT	A-500 GR. B	46,000

FINISH SPECIFICATIONS
POLES SHALL HAVE A POLYESTER POWDER COAT FINISH IN A STANDARD COLOR.

POLE DIMENSIONS				
POLE HGT (FT.)	TOP SQ. SIZE (IN.)	BOT. SQ. SIZE (IN.)	GAGE	MTG. HGT. (FT.)
15'	4.00	4.00	11 GAGE	12'

ALLOWABLE WIND LOADING (SQ. FT.)					
WIND*	INDICATED EPA	80 MPH	90 MPH	100 MPH	120 MPH
EPA	-	20.5	16.6	13.4	9.4

*WITH 1.3 GUST FACTOR

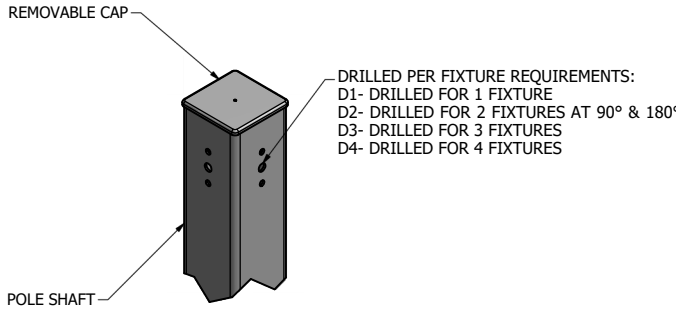

DRILL MOUNT OPTIONS

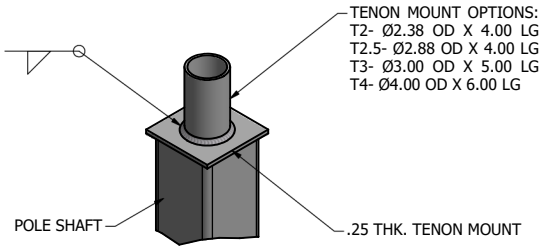

TENON MOUNT OPTIONS

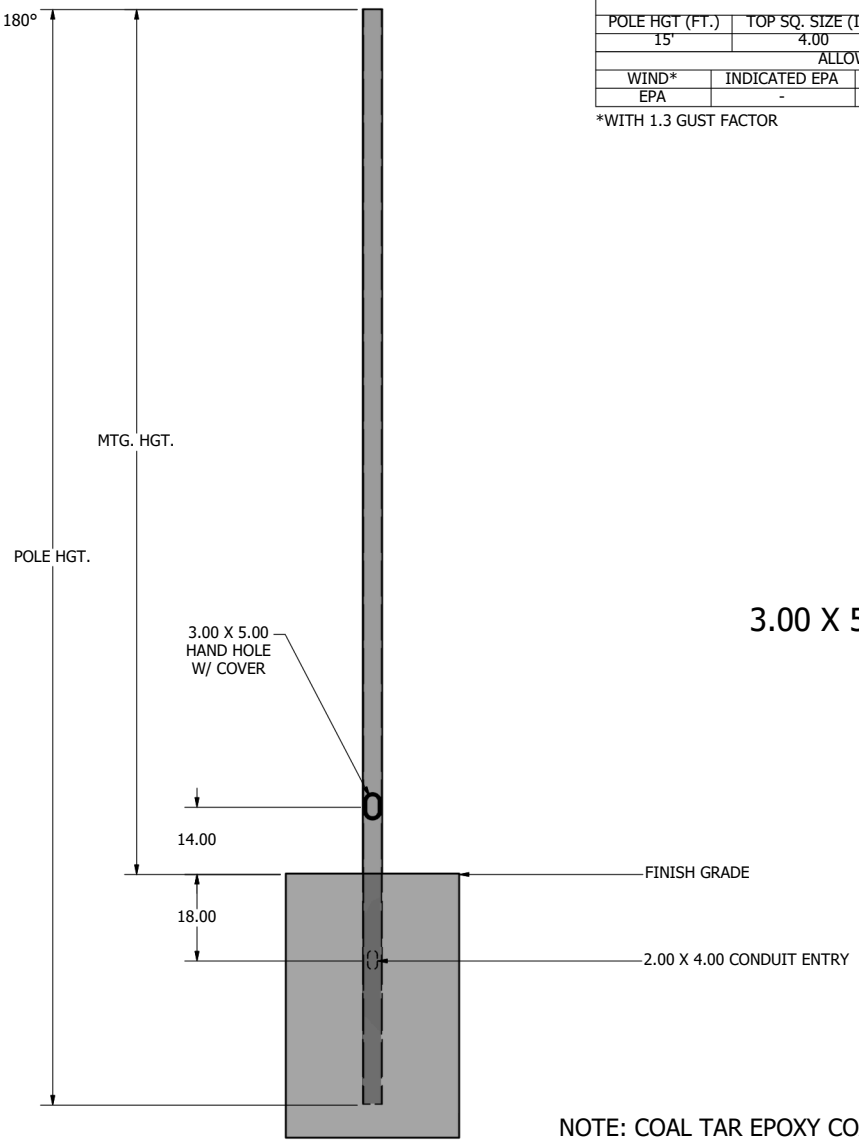

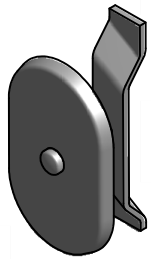

3.00 X 5.00 HAND HOLE COVER

NOTE: COAL TAR EPOXY COATING AVAILABLE AS AN OPTION FOR EMBEDDED PORTION PLUS 6 IN. OF THE POLE SHAFT.

POLE DETAIL

180°
270° 90°
0°
HAND HOLE

DRAWN: L. GRUNIS 2/7/2017
C H ECKE D
REV ISI ON :
D A TE:
AP PR OVE D:
QUOTE:
S.O.#
REF:
SCALE: NONE

AMERICAN LIGHTING SYSTEMS™
15841 Old US Highway
441 Tavares, FL 32778
(321) 203-4869
sales@americanlightingsystem.com
www.AmericanLightingSystem.com

SOME GEOGRAPHICAL AREAS HAVE SPECIAL WIND CONDITIONS THAT CAN CREATE WIND INDUCED VIBRATIONS CAUSING A FATIGUE PROBLEM. NO METHOD HAS YET BEEN FOUND FOR PREDICTING DESTRUCTIVE LIGHTING POLE VIBRATION. THESE CONDITIONS ARE UNIQUE AND CANNOT BE GUARANTEED AGAINST, AND ARE THE RESPONSIBILITY OF A LOCAL SITE ENGINEER.

TITLE:
C AT ALO G:
DWG NO: ALS-SSQS-12-4-11-DB
SIZE: C
SHEET 1 OF 1