


## DRILLED MOUNT OPTIONS

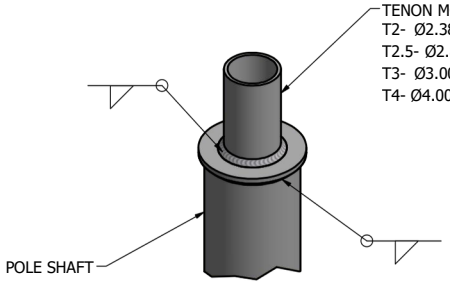


## TENON MOUNT OPTIONS

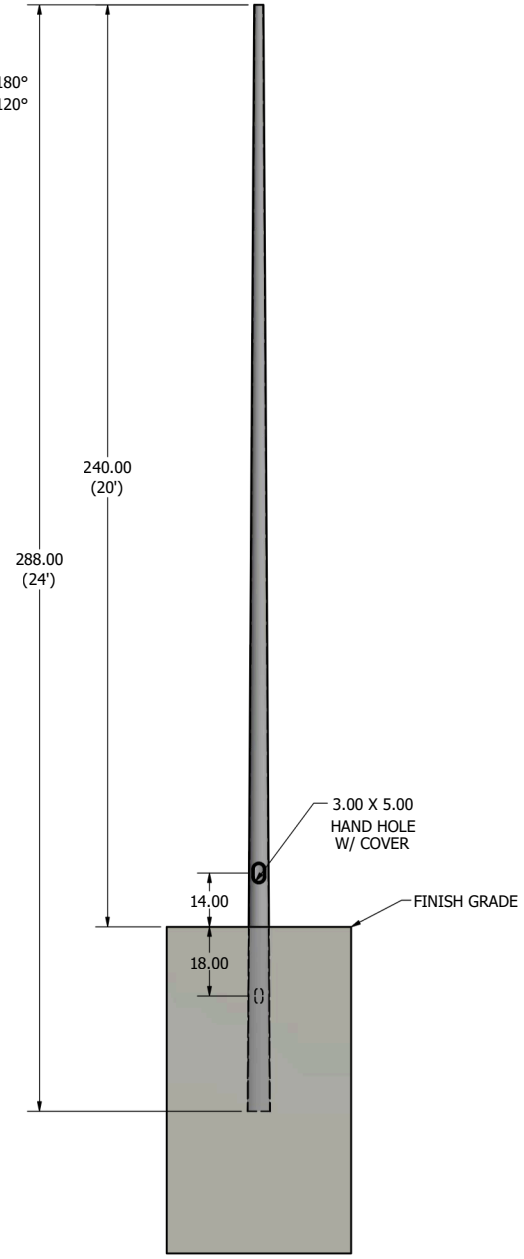


## POLE DETAIL

POLE SPECIFICATIONS

| NO. | COMPONENT | ASTM DESIGNATION | MIN. YIELD (P.S.I) |
|---|---|---|---|
| 1. | POLE SHAFT | A-595 GR. A | 55,000 |
| 2. | BASE PLATE | A36 | 36,000 |
| 3. | ANCHOR BOLTS | F1554 GR. 55 | 55,000 |
| 4. | GALVANIZED HARDWARE | A153 | - |

FINISH SPECIFICATIONS

POLES SHALL HAVE A POLYESTER POWDER COAT FINISH IN A STANDARD COLOR.

POLE DIMENSIONS

| POLE HGT (FT.) | TOP DIA. (IN.) | BOTTOM DIA. (IN.) | GAGE | MTG. HGT. (FT.) |
|---|---|---|---|---|
| 24' | 2.4 | 5.90 | 11 GAGE | 20' |

ALLOWABLE WIND LOADING (SQ. FT.)

| WIND* | INDICATED EPA | 80 MPH | 90 MPH | 100 MPH | 120 MPH |
|---|---|---|---|---|---|
| EPA | - | 12.2 | 9.8 | 7.9 | 6.2 |

*WITH 1.3 GUST FACTOR

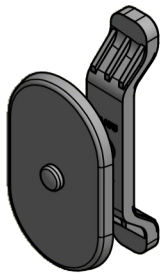

## 3.00 X 5.00 HAND HOLE COVER

NOTE: COAL TAR EPOXY COATING AVAILABLE AS AN OPTION FOR EMBEDDED PORTION PLUS 6 IN. OF THE POLE SHAFT.

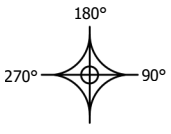


| | |
|---|---|
| DRAWN: D. KONCHADA | DATE: 7/7/2020 |
| REVISION: | DATE: |
| QUOTE: | PO.# |
| APPROVAL SIGNATURE: | |

15841 Old US Highway
441 Tavares, FL 32778
(321) 203-4869

sales@americanlightingsystem.com
www.AmericanLightingSystem.com

SOME GEOGRAPHICAL AREAS HAVE SPECIAL WIND CONDITIONS THAT CAN CREATE WIND INDUCED VIBRATIONS CAUSING A FATIGUE PROBLEM. NO METHOD HAS YET BEEN FOUND FOR PREDICTING DESTRUCTIVE LIGHTING POLE VIBRATION. THESE CONDITIONS ARE UNIQUE AND CANNOT BE GUARANTEED AGAINST, AND ARE THE RESPONSIBILITY OF A LOCAL SITE ENGINEER.

**WARNING:** DO NOT INSTALL LIGHT POLE WITHOUT INTENDED LOADING.

TITLE:

CATALOG:

DWG NO: ALS-SRDT-20-5911-DB | SIZE: C | SHEET 1 OF 1