POLE SPECIFICATIONS			
NO.	COMPONENT	ASTM DESIGNATION	MIN. YIELD (P.S.I)
1.	POLE SHAFT	A-500 GR. B	46,000
FINISH SPECIFICATIONS			
POLES SHALL HAVE A POLYESTER POWDER COAT FINISH IN A STANDARD COLOR.			
POLE DIMENSIONS			
POLE HGT (FT.)	TOP DIA. (IN.)	BOTTOM DIA. (IN.)	GAGE	MTG. HGT. (FT.)
30'	5.00	5.00	11 GAGE	25'
ALLOWABLE WIND LOADING (SQ. FT.)				
WIND*	INDICATED EPA	80 MPH	90 MPH	100 MPH	120 MPH
EPA	-	6.7	5.0	3.7	2.0

*WITH 1.3 GUST FACTOR

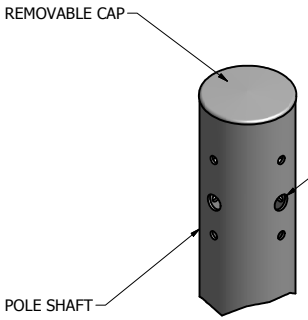

DRILL MOUNT OPTIONS

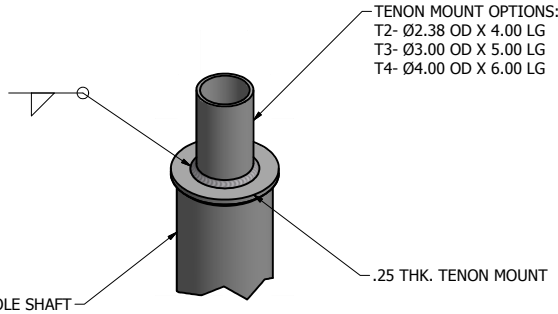

TENON MOUNT OPTIONS

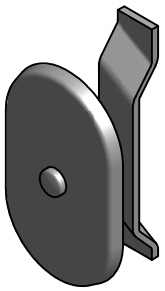

3.00 X 5.00 HAND HOLE COVER

POLE DETAIL

NOTE: COAL TAR EPOXY COATING AVAILABLE AS AN OPTION FOR EMBEDDED PORTION PLUS 6 IN. OF THE POLE SHAFT.

SOME GEOGRAPHICAL AREAS HAVE SPECIAL WIND CONDITIONS THAT CAN CREATE WIND INDUCED VIBRATIONS CAUSING A FATIGUE PROBLEM. NO METHOD HAS YET BEEN FOUND FOR PREDICTING DESTRUCTIVE LIGHTING POLE VIBRATION. THESE CONDITIONS ARE UNIQUE AND CANNOT BE GUARANTEED AGAINST, AND ARE THE RESPONSIBILITY OF A LOCAL SITE ENGINEER.

TITLE:

CATALOG:

DWG NO: ALS-SRDS-25-5-11-DB | SIZE: C | SHEET 1 OF 1

15841 Old US Highway 441
Tavares, Florida 32778
(321) 203-4869
sales@americanlightingsystems.com
AmericanLightingSystems.com

DRAWN: L. GRUNIS	3/5/2015		
CHECKED		DATE:	
REVISION:		APPROVED:	
QUOTE:		S.O.#	
REF:		SCALE: NONE	

180°
270° 90°
0°
HANDHOLE