POLE SPECIFICATIONS			
NO.	COMPONENT	ASTM DESIGNATION	MIN. YIELD (P.S.I)
1.	POLE SHAFT	A-500 GR. B	46,000
FINISH SPECIFICATIONS			
POLES SHALL HAVE A POLYESTER POWDER COAT FINISH IN A STANDARD COLOR.			
POLE DIMENSIONS			
POLE HGT (FT.)	TOP DIA. (IN.)	BOTTOM DIA. (IN.)	GAGE / MTG. HGT. (FT.)
20'	4.00	4.00	11 GAGE / 16'

ALLOWABLE WIND LOADING (SQ. FT.)					
WIND*	INDICATED EPA	80 MPH	90 MPH	100 MPH	120 MPH
EPA	-	9.0	6.8	5.3	2.9

*WITH 1.3 GUST FACTOR

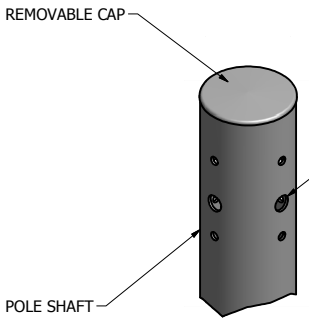

DRILL MOUNT OPTIONS

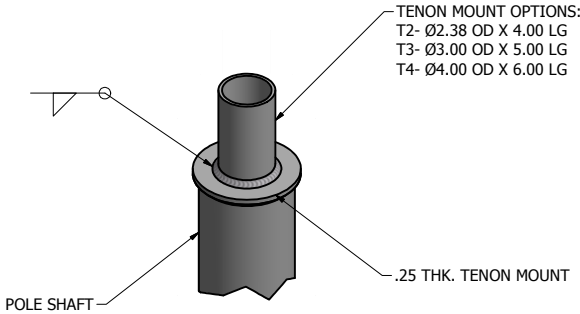

TENON MOUNT OPTIONS

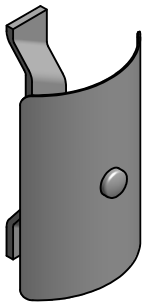

2.00 X 4.00 HAND HOLE COVER

POLE DETAIL

NOTE: COAL TAR EPOXY COATING AVAILABLE AS AN OPTION FOR EMBEDDED PORTION PLUS 6 IN. OF THE POLE SHAFT.

SOME GEOGRAPHICAL AREAS HAVE SPECIAL WIND CONDITIONS THAT CAN CREATE WIND INDUCED VIBRATIONS CAUSING A FATIGUE PROBLEM. NO METHOD HAS YET BEEN FOUND FOR PREDICTING DESTRUCTIVE LIGHTING POLE VIBRATION. THESE CONDITIONS ARE UNIQUE AND CANNOT BE GUARANTEED AGAINST, AND ARE THE RESPONSIBILITY OF A LOCAL SITE ENGINEER.

TITLE:

CATALOG:

DWG NO: ALS-SRDS-16-4-11-DB

SIZE: C

SHEET 1 OF 1

15841 Old US Highway 441
Tavares, Florida 32778
(321) 203-4869
sales@americanlightingsystems.com
AmericanLightingSystems.com

AMERICAN LIGHTING SYSTEMS

DRAWN: L. GRUNIS 3/5/2015

CHECKED

REVISION: DATE:

APPROVED:

QUOTE:

S.O.#

REF: SCALE: NONE

180°
270° 90°
0°
HANDHOLE