Type:
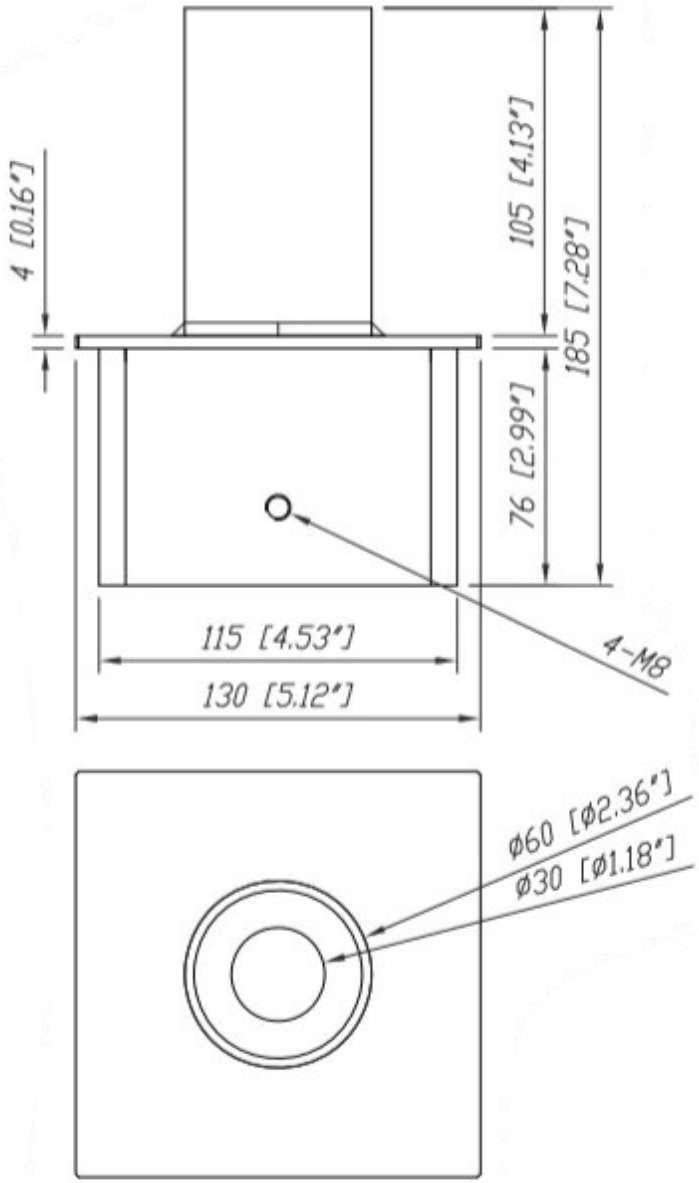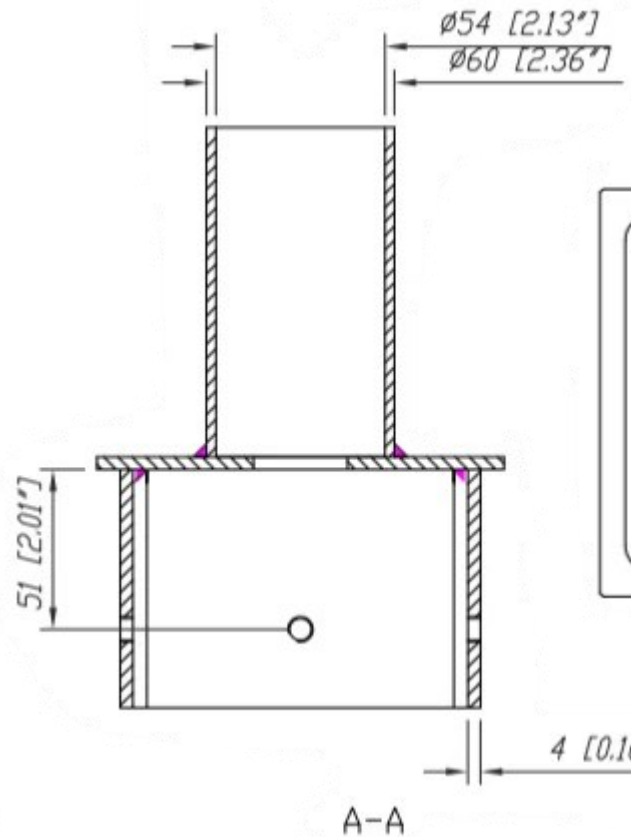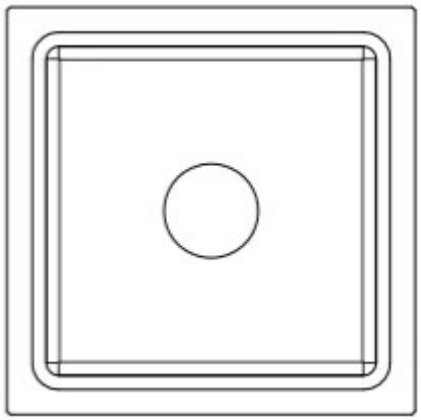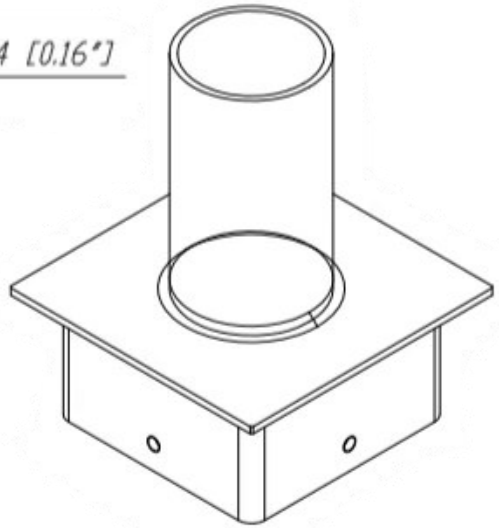
Part #: ALS-SMH-TENON-5IN-SQ-F