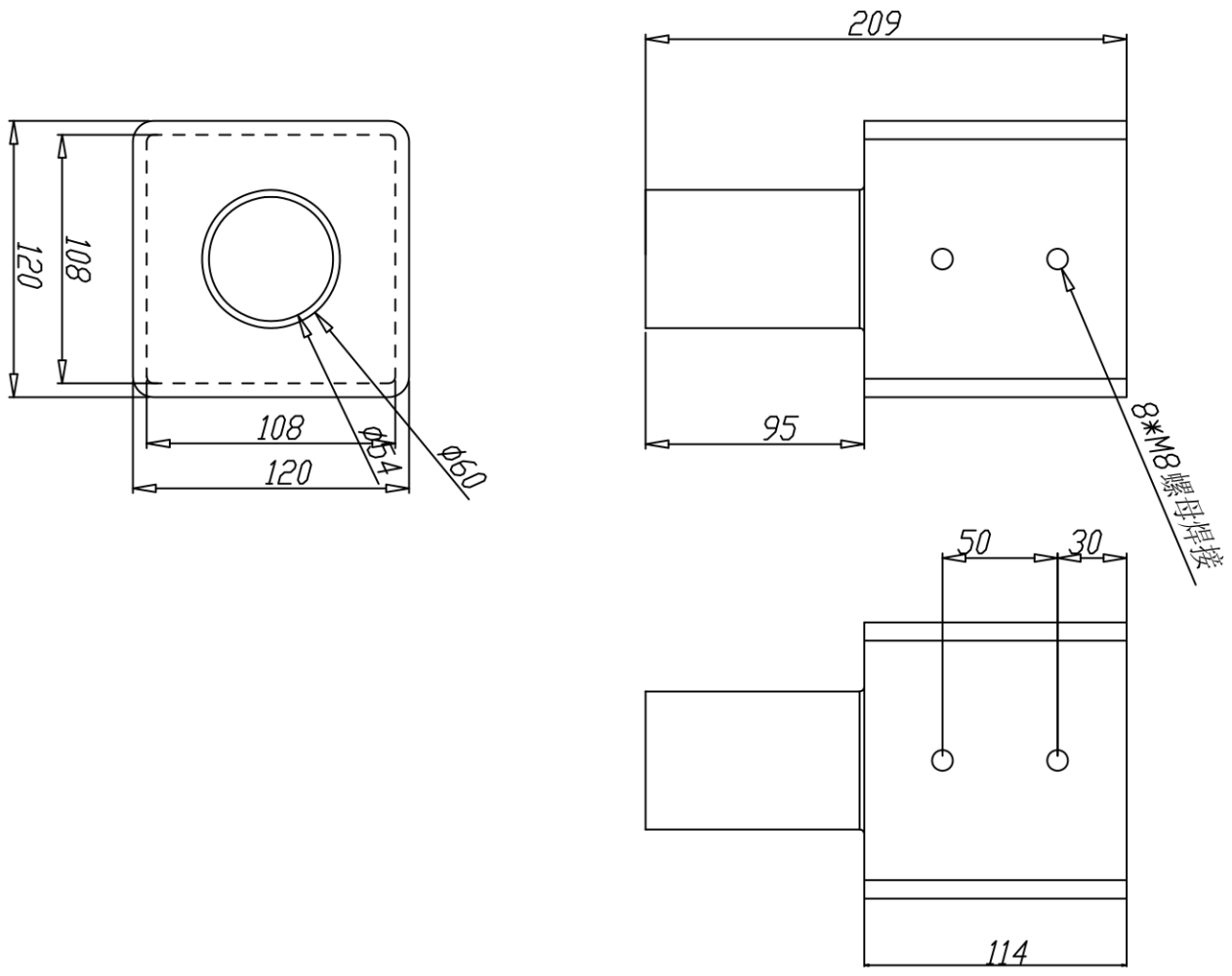

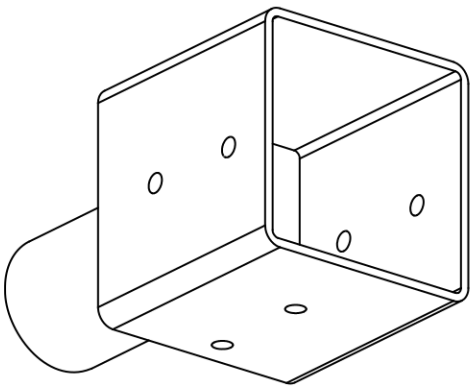

REV.	ZONE	DESCRIPTIONS	DWN BY	DATE