REV.	ZONE	DESCRIPTIONS	DWN BY	DATE

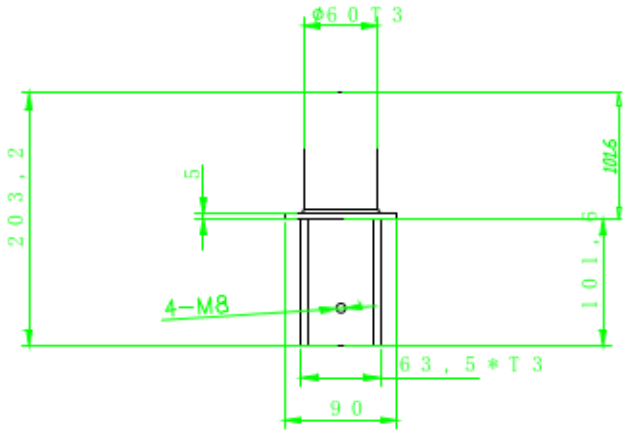

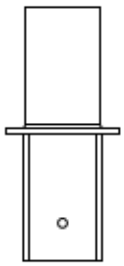

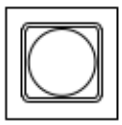

DO NOT SCALE DRAWING

TOLERANCE ALL DIM. ARE IN mm

	0.<3	3.<6	6.<30	30.<120	120.<315
A	0.05	0.05	0.10	0.20	0.30
B	0.0	0.0	0.05	0.20	0.30	0.50
C	0.20	0.30	0.40	0.50	0.71
D	0.40	0.50	0.71	0.01	0.52