Type:
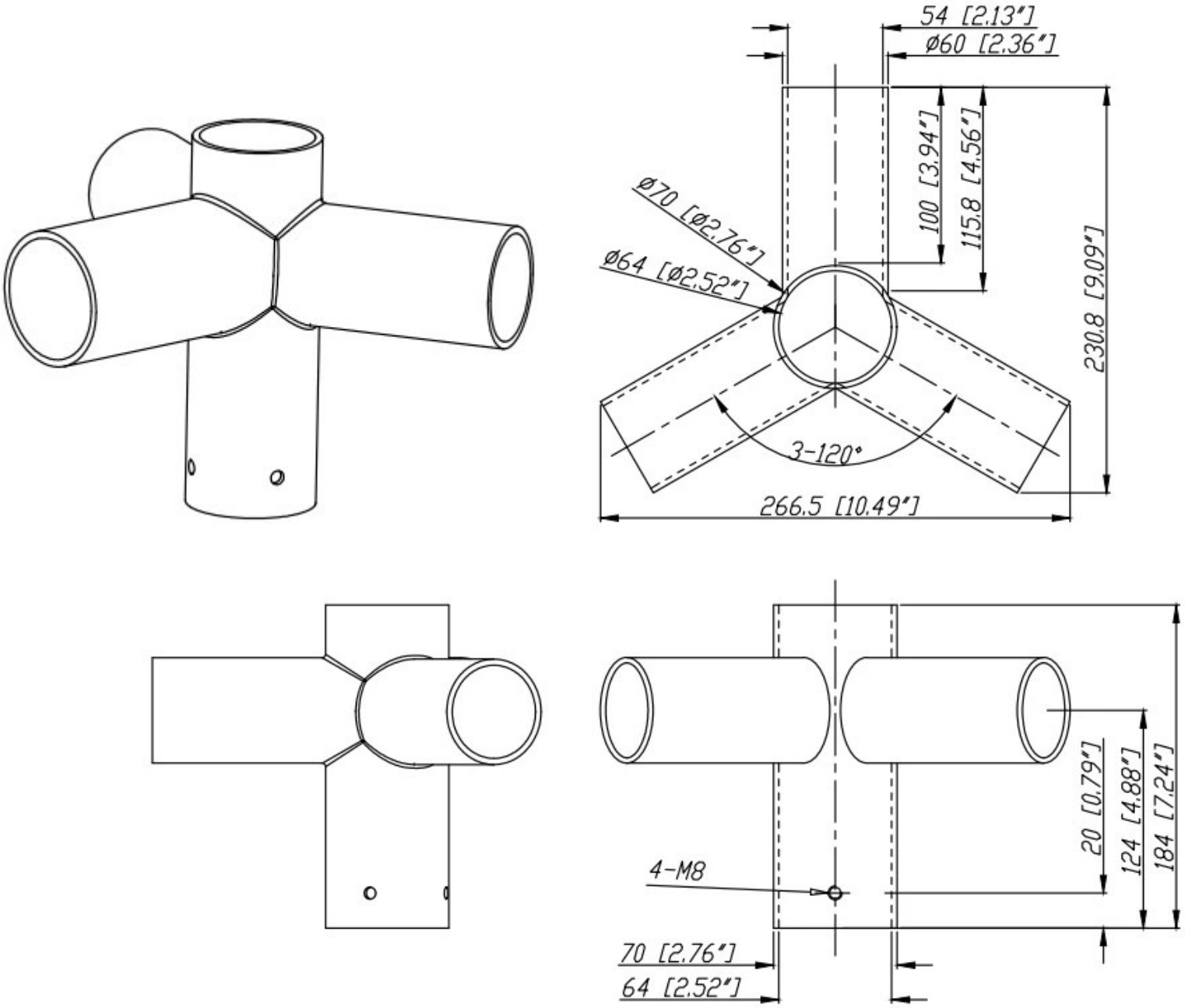
Part #: ALS-SMH-SPOKE-3-120