AMERICAN LIGHTING SYSTEMS™

Job Name:

Type:

Part #:

Notes:

480V Color & Wattage SELECTABLE LED Area Lights

100/150/200W & 200/240/300 WATTS

PERFORMANCE SERIES



These area lights feature outstanding photometric performance, uniform illumination, low-profile design, high efficacy, long lifespan, and easy installation. Constructed with a one-piece die-cast aluminum housing finished in a durable, UV-resistant bronze powder coat, the fixture offers outstanding corrosion resistance for long-term outdoor exposure. The optical assembly uses high-efficiency LED components paired with a 90% efficient driver and 0-10V dimming capability, all housed within a low-profile, weather-sealed enclosure. The fixture is compatible with a universal range of mounting brackets — including slip fitter, slip fitter with arm, square/round pole mount, trunnion, and yoke configurations — sold separately to match the installation requirement.

Rated IP65 for wet locations, the fixture operates on AC277-480V input and carries RoHS, FCC, and UL certifications for the US and Canada. With an operating temperature range of -40°F to 113°F and a rated life exceeding 50,000 hours, this fixture is backed by a 5-year limited warranty. It is ideally suited for high-voltage commercial and industrial sites requiring long-term, low-maintenance area illumination.

Ordering Information

Example: ALS-SB-P2-100/150/200W-3/4/5K-HV-T3-BZ

MODEL	Wattage	CCT	Voltage	Optics	Color
ALS-SB-P2	**100/150/200W** **200/240/300W**	**3/4/5K**	**HV** - 277-480	**T3** - Type III	**BZ** - Bronze **WH** - White

Options SEE PAGE 3

ALS-SB-SF - Type A Slip Fitter Mount **ALS-SB-AA** - Adjustable Arm Mount **ALS-SB-TRUNNION** - Type D Trunnion Mount **ALS-SB-YOKE -** Yoke Mount **ALS-ALGS** - Glare Shield **ALS-SB-PC -** Photocell	**BZ** - Bronze **WH** - White

AMERICAN LIGHTING SYSTEMS™

Job Name:

Type:

Part #:

Notes:

General Specifications

Frame Material	Cast Aluminum Design - better cooling	**Finish**	Dark Bronze or White
Dimming	0-10Vdc	**Distribution**	Type III
Outdoor Rating	Wet location/IP65	**Efficacy**	150LPW
Working Temperature	-40°F ~ 113°F	**Driver Efficacy**	90%
Storage Temperature	-40°F ~ 176°F	**Power Factor**	0.95
CRI	Ra> 70	**Input Voltage**	AC120-277V / AC277-480V
Warranty	5 Year Limited	**Life Span**	over 50,000 hrs

Dimensions & Weight

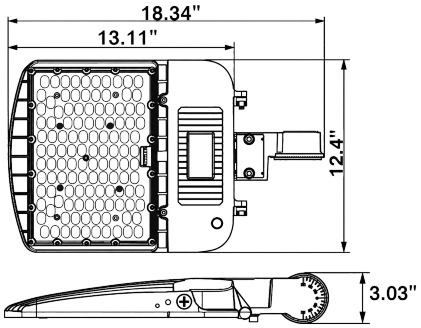

 # ALS-SB-P2-100/150/200W-5K-III--HV**

Wattage: 100/150/200W

CCT: 3000K, 4000K, 5000K

Lumens (Max): 23,186lm

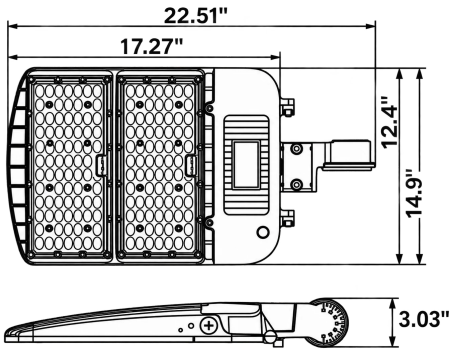

 # ALS-SB-P2-200/240/300W-5K-III--HV**

Wattage: 200/240/300

CCT: 3000K, 4000K, 5000K

Lumens (Max): 31,220lm

Weight

Model	Net Weight	Packaged Weight
100/150/200W	7.41Lbs (3.36Kg)	10.05Lbs (4.56Kg)
200/240/300W	9.5Lbs (4.31Kg)	11.51Lbs (5.22Kg)

AMERICAN LIGHTING SYSTEMS™

Job Name:

Type:

Part #:

Notes:

ACCESSORIES & MOUNTING BRACKETS



ALS-SB-SF-BZ



ALS-SB-AA-BZ



ALS-SB-TRUNNION-BZ



ALS-ALGS



ALS-SB-PC



ALS-SB-P2-YOKE

APPLICATIONS



