POLE SPECIFICATIONS		
NO.	COMPONENT	MAT'L DESIGNATION
1.	POLE SHAFT	6063-T6

FINISH SPECIFICATIONS

POLES SHALL HAVE A POLYESTER POWDER COAT FINISH IN A STANDARD COLOR.

POLE DIMENSIONS

POLE HGT (FT.)	TOP SQ. SIZE (IN.)	BOT. SQ. SIZE (IN.)	GAGE	MTG. HGT. (FT.)
24'	6.00	6.00	.188	20'

ALLOWABLE WIND LOADING (SQ. FT.)

WIND*	INDICATED EPA	80 MPH	90 MPH	100 MPH	120 MPH
EPA	-	16.4	12.4	9.2	3.8

*WITH 1.3 GUST FACTOR

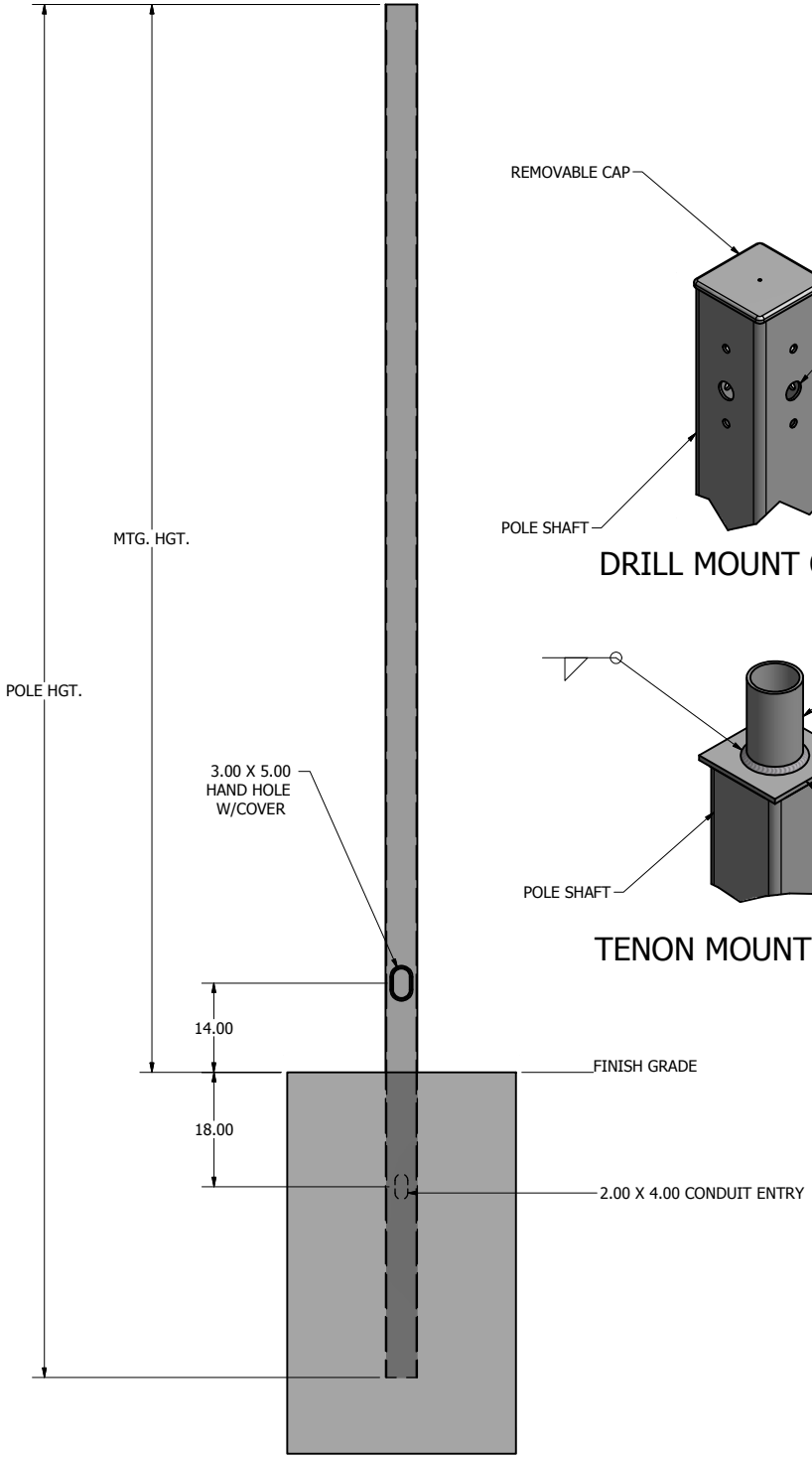

POLE DETAIL

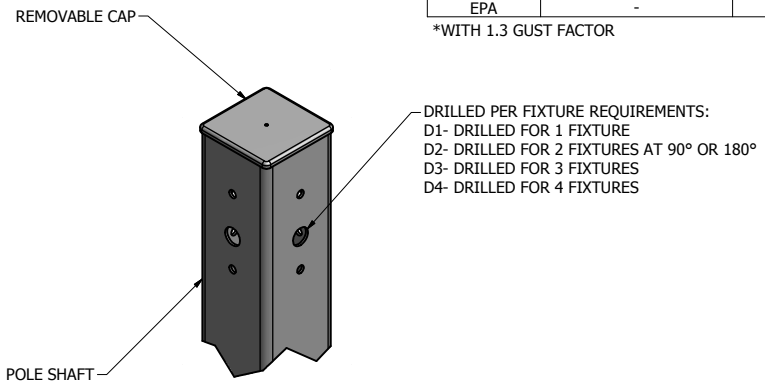

DRILL MOUNT OPTIONS

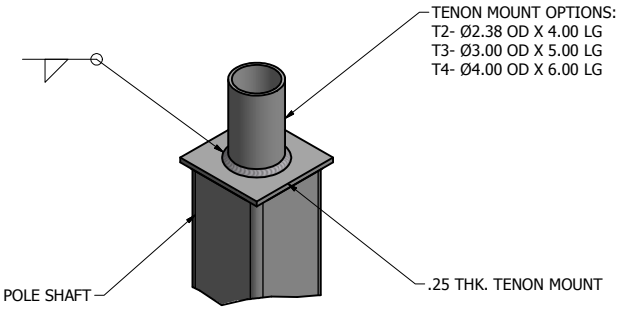

TENON MOUNT OPTIONS

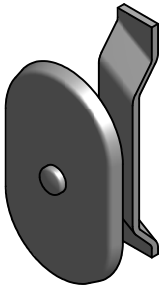

3.00 X 5.00 HAND HOLE COVER

NOTE: COAL TAR EPOXY COATING AVAILABLE AS AN OPTION FOR EMBEDDED PORTION PLUS 6 IN. OF THE POLE SHAFT.

SOME GEOGRAPHICAL AREAS HAVE SPECIAL WIND CONDITIONS THAT CAN CREATE WIND INDUCED VIBRATIONS CAUSING A FATIGUE PROBLEM. NO METHOD HAS YET BEEN FOUND FOR PREDICTING DESTRUCTIVE LIGHTING POLE VIBRATION. THESE CONDITIONS ARE UNIQUE AND CANNOT BE GUARANTEED AGAINST, AND ARE THE RESPONSIBILITY OF A LOCAL SITE ENGINEER.

TITLE:

CATALOG:

DWG NO: ALS-ASQS-6203-DB

SIZE: C

SHEET 1 OF 1

15841 Old US Highway 441
Tavares, Florida 32778
(321) 203-4869
sales@americanlightingsystems.com
AmericanLightingSystems.com

DRAWN: L. GRUNIS 3/5/2015

CHECKED

REVISION: DATE:

APPROVED:

QUOTE:

S.O. #

REF:

SCALE: NONE

180°
270° 90°
0°
HANDHOLE