POLE SPECIFICATIONS					
NO.	COMPONENT		MAT'L DESIGNATION		
1.	POLE SHAFT		6063-T6		
FINISH SPECIFICATIONS					
POLES SHALL HAVE A POLYESTER POWDER COAT FINISH IN A STANDARD COLOR.					
POLE DIMENSIONS					
POLE HGT (FT.)	TOP SQ. SIZE (IN.)	BOT. SQ. SIZE (IN.)	GAGE	MTG. HGT. (FT.)	
15'	4.00	4.00	.125	12'	
ALLOWABLE WIND LOADING (SQ. FT.)					
WIND*	INDICATED EPA	80 MPH	90 MPH	100 MPH	120 MPH
EPA	-	8.4	6.5	4.8	2.6

*WITH 1.3 GUST FACTOR

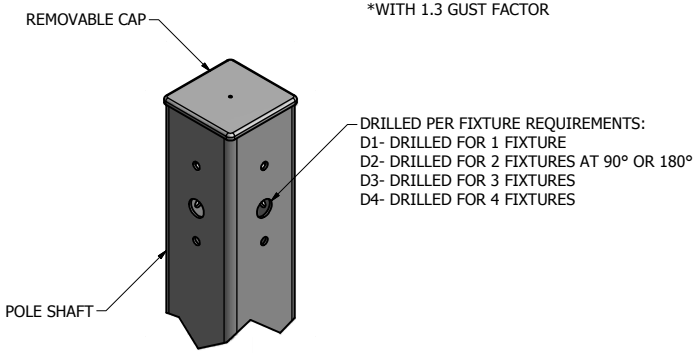

DRILL MOUNT OPTIONS

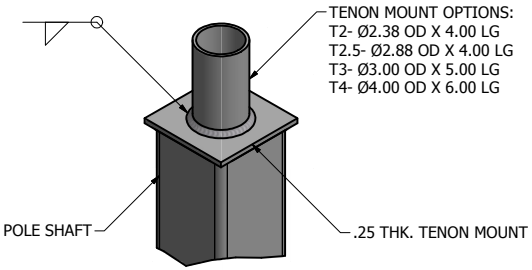

TENON MOUNT OPTIONS

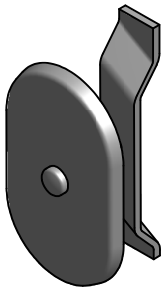

3.00 X 5.00 HAND HOLE COVER

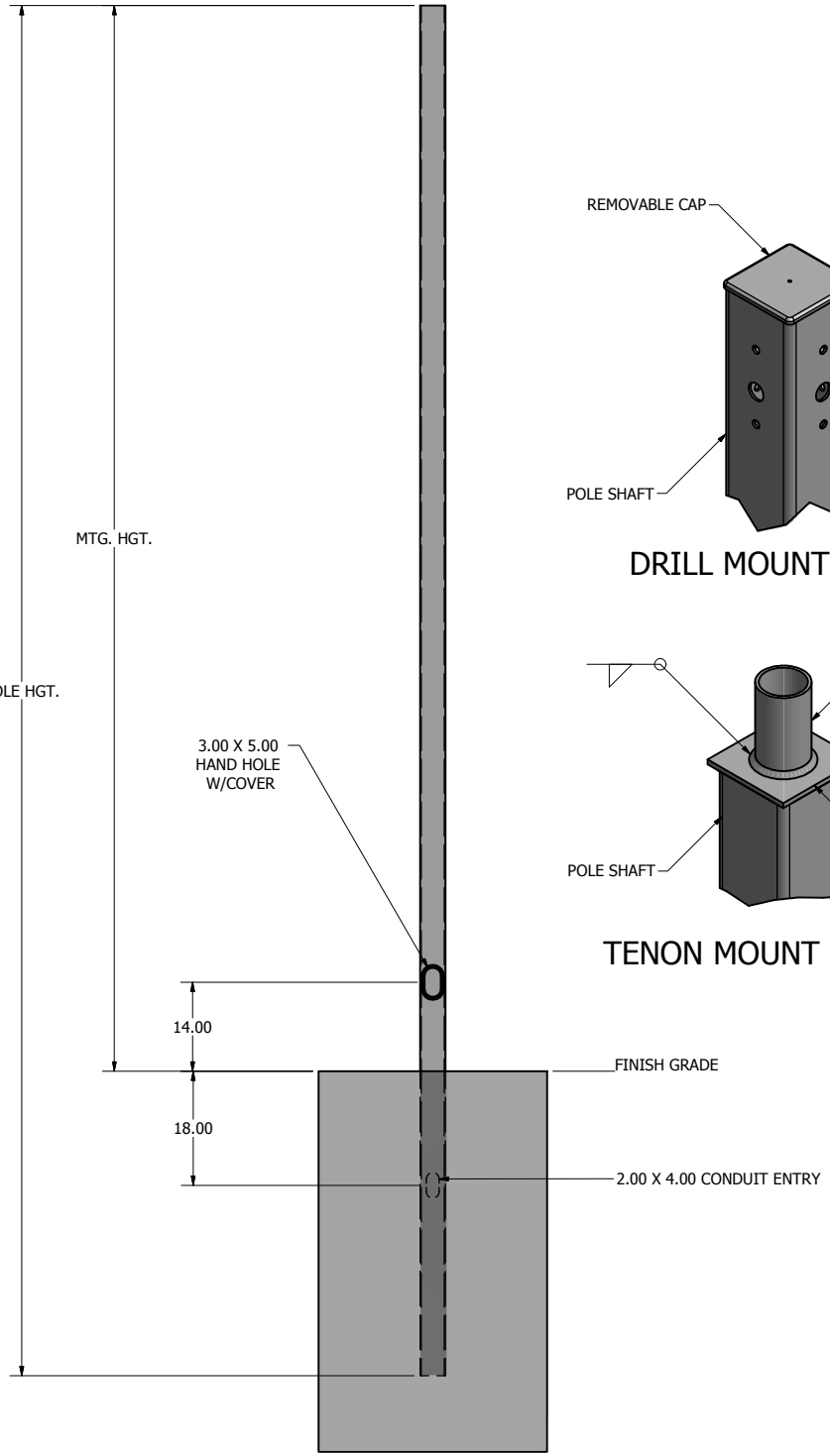

POLE DETAIL

NOTE: COAL TAR EPOXY COATING AVAILABLE AS AN OPTION FOR EMBEDDED PORTION PLUS 6 IN. OF THE POLE SHAFT.

SOME GEOGRAPHICAL AREAS HAVE SPECIAL WIND CONDITIONS THAT CAN CREATE WIND INDUCED VIBRATIONS CAUSING A FATIGUE PROBLEM. NO METHOD HAS YET BEEN FOUND FOR PREDICTING DESTRUCTIVE LIGHTING POLE VIBRATION. THESE CONDITIONS ARE UNIQUE AND CANNOT BE GUARANTEED AGAINST, AND ARE THE RESPONSIBILITY OF A LOCAL SITE ENGINEER.

TITLE:

CATALOG:

DWG NO: **ALS-ASQS-4121-DB**

SIZE: C

SHEET 1 OF 1

15841 Old US Highway 441
Tavares, Florida 32778
(321) 203-4869
sales@americanlightingsystems.com
AmericanLightingSystems.com

DRAWN: L. GRUNIS 2/6/2017

CHECKED

REVISION: DATE:

APPROVED:

QUOTE:

S.O. #

REF:

SCALE: NONE

180°
270° 90°
0°
HANDHOLE